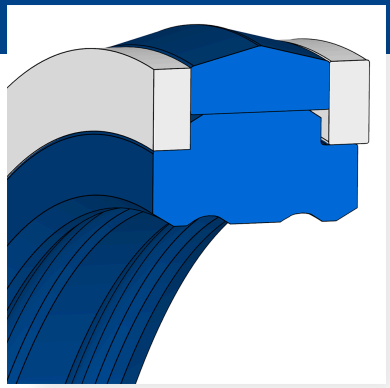

FREUDENBERG

Compact seal Merkel® T42

DESCRIPTION

- Symmetrical
- Four-piece
- Support rings
- Profile ring as sealing and preloaded element

FUNCTION

- Sealing of pistons
- For pressure load from both sides
- Support ring as gap closure element prevents gap extrusion

PRODUCT ADVANTAGES

- Good static and dynamic sealing effect
- High wear resistance
- High extrusion reliability
- Market-leading, proprietary design with the widest range of applications in all industries and for a variety of requirements
- High resistance to torsion in the installation space
- Highest quality, durability and safety
- Best results in total cost of ownership

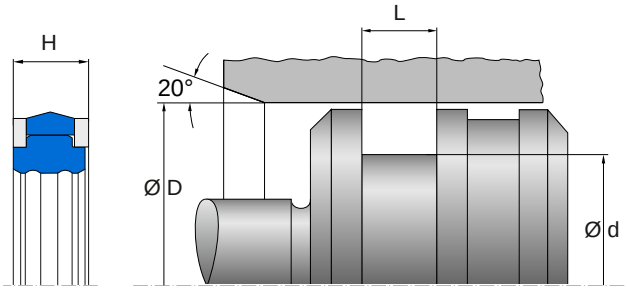

APPLICATIONS

- Mining

CONFORMITY AND CERTIFICATES

- Please consult the material data sheet valid for the respective material for current information on approvals and certificates, as this information depends on the compound and cannot be listed exhaustively here.

DESIGN GUIDELINE

- Please follow the QR code or hyperlink to the technical manual to obtain further information and instructions.

INSTALLATION GUIDELINE

- Please follow the QR code or hyperlink to the technical manual to obtain further information and instructions.

FREUDENBERG
SEALING TECHNOLOGIES

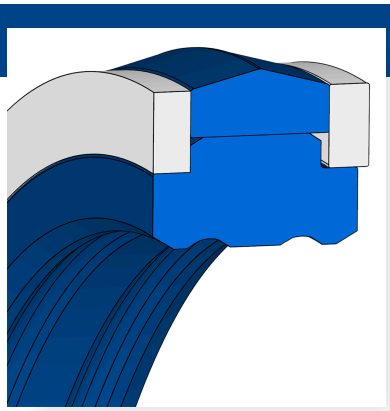

FREUDENBERG

Compact seal Merkel® T42

STORAGE ADVISE

- Storage temperature <25°C
- No direct heat sources
- No direct sunlight
- No condensation in the storage room
- No exposure to ozone or ionizing radiation
- Recommendations based on the revision of ISO 2230 dated 16.09.1992

Pressure [MPa]

93 AU V167
50

Sliding speed [m/s]

93 AU V167
0.1

Temperature [°C]

Medium	93 AU V167
HFA fluids	5...60
HFD fluids	5...60

The values given are based on a limited number of tests on standard test specimens (2 mm sample plates) from laboratory production. The data determined from finished parts may deviate from the above values depending on the manufacturing process and the part geometry.

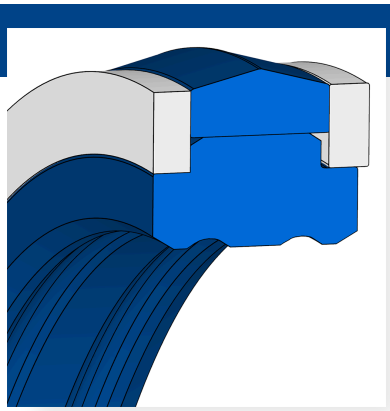

FREUDENBERG

Compact seal Merkel® T42

The information provided herein is based on laboratory tests and on data sources deemed reliable. It constitutes general, non-binding guideline values and does not represent any guarantee of specific properties or suitability for a particular purpose. The suitability of a product for a specific application depends on the actual operating conditions and a variety of factors. Full testing and performance evaluation of the final product are the responsibility of the user. Freudenberg FST GmbH | www.fst.com

FREUDENBERG
SEALING TECHNOLOGIES