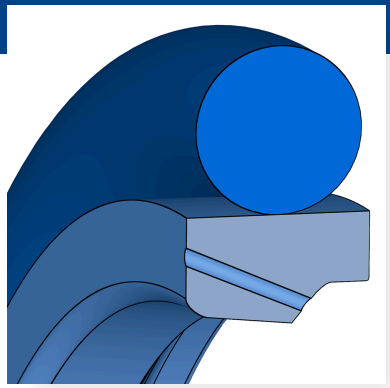

FREUDENBERG

Rod seal Merkel® Omegat OMS-MRPR

DESCRIPTION

- Asymmetrical
- Two-piece
- O-ring as sealing and preloading element
- Tight fit on the outer diameter
- Integrated pressure relief function

FUNCTION

- Sealing of piston rods
- Use with one-sided pressure load
- Pressure relief function prevents permanent pressure build-up between primary and secondary seal

APPLICATIONS

- Industrial presses
- Mobile hydraulics
- Injection moulding machines

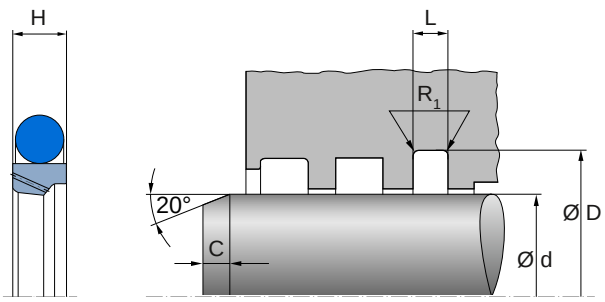

PRODUCT ADVANTAGES

- High wear resistance
- High extrusion reliability
- Long service life
- Market-leading, proprietary design with the widest range of applications in all industries and for a variety of requirements
- No stick-slip effect
- Highest quality, durability and safety
- Best results in total cost of ownership

CONFORMITY AND CERTIFICATES

- Please consult the material data sheet valid for the respective material for current information on approvals and certificates, as this information depends on the compound and cannot be listed exhaustively here.

DESIGN GUIDELINE

- Sharp edges deburred or chamfered or rounded
- To avoid damage, cylinder tubes and piston rods must be chamfered, surface finish Rt=4m
- Please follow the QR code or hyperlink to the technical manual to obtain further information and instructions.

FREUDENBERG
SEALING TECHNOLOGIES

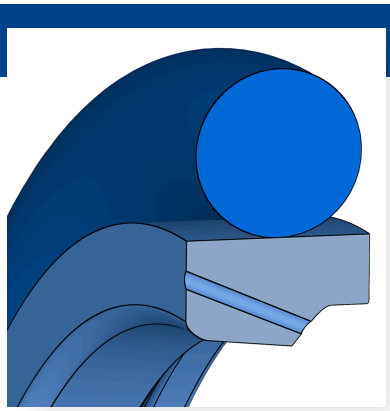

FREUDENBERG

Rod seal Merkel® Omegat OMS-MRPR

INSTALLATION GUIDELINE

- No machining residues, chips, dirt, etc.
- Do not pull the seal over sharp edges, threads, or keyways during installation; cover with an installation sleeve if necessary
- Please follow the QR code or hyperlink to the technical manual to obtain further information and instructions.

STORAGE ADVISE

- Storage temperature <25°C
- No direct heat sources
- No direct sunlight
- No condensation in the storage room
- No exposure to ozone or ionizing radiation
- Recommendations based on the revision of ISO 2230 dated 16.09.1992

FREUDENBERG
SEALING TECHNOLOGIES

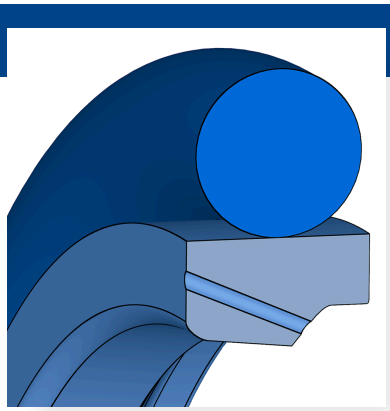

FREUDENBERG

Rod seal Merkel® Omegat OMS-MRPR

Temperature [°C]

Medium	PE / NBR
Hydraulic oils HL, HLP	-30...80
HFA fluids	5...60
HFB fluids	5...60
HFC fluids	-30...60
HFD fluids	
Water	5...80
HETG (rapeseed oil)	-30...80
HEES (synthetic esters)	-30...80
HEPG (polyglycols)	-30...60
Mineral greases	-30...80

The values given are based on a limited number of tests on standard test specimens (2 mm sample plates) from laboratory production. The data determined from finished parts may deviate from the above values depending on the manufacturing process and the part geometry.

The information provided herein is based on laboratory tests and on data sources deemed reliable. It constitutes general, non-binding guideline values and does not represent any guarantee of specific properties or suitability for a particular purpose. The suitability of a product for a specific application depends on the actual operating conditions and a variety of factors. Full testing and performance evaluation of the final product are the responsibility of the user. Freudenberg FST GmbH | www.fst.com

FREUDENBERG
SEALING TECHNOLOGIES