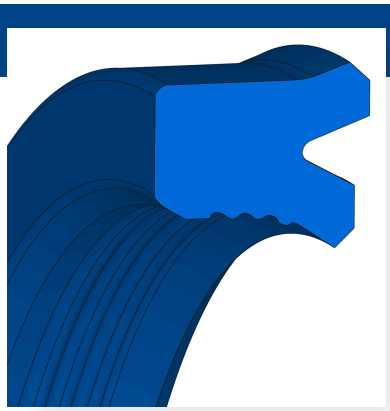

FREUDENBERG

U-Cup LF300

DESCRIPTION

- Asymmetrical
- Sharp, cut sealing edge
- Grooved contact surface on inner diameter

FUNCTION

- For installation spaces according to ISO 6195 type B, among others
- Sealing of piston rods
- Use with one-sided pressure load

PRODUCT ADVANTAGES

- Low friction even at low speed
- Market-leading, proprietary design with the widest range of applications in all industries and for a variety of requirements
- Very good static and dynamic sealing effect
- No stick-slip effect
- Highest quality, durability and safety
- Very good dynamic return capacity
- Best results in total cost of ownership

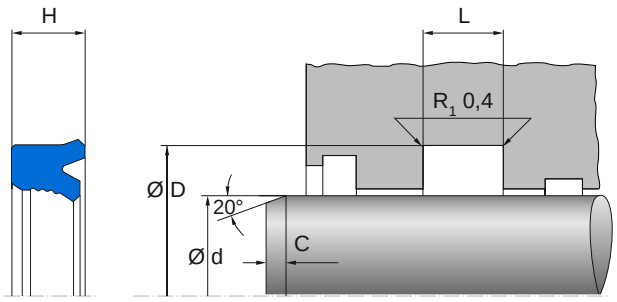

APPLICATIONS

- Earthmoving equipment
- Industrial trucks
- Tail lifts
- Agricultural machinery
- Lorry loading cranes
- Injection moulding machines

CONFORMITY AND CERTIFICATES

- Please consult the material data sheet valid for the respective material for current information on approvals and certificates, as this information depends on the compound and cannot be listed exhaustively here.

DESIGN GUIDELINE

- Standardized installation spaces according to ISO 5597
- Sharp edges deburred or chamfered or rounded
- To avoid damage, cylinder tubes and piston rods must be chamfered, surface finish Rt=4m
- Please follow the QR code or hyperlink to the technical manual to obtain further information and instructions.

FREUDENBERG
SEALING TECHNOLOGIES

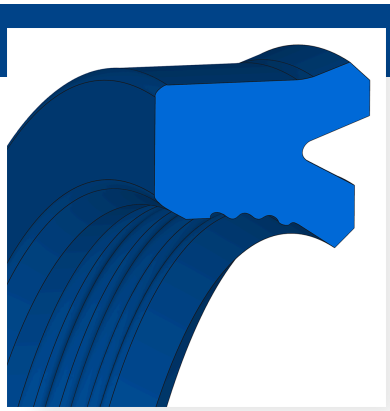

FREUDENBERG

U-Cup LF300

INSTALLATION GUIDELINE

- No machining residues, chips, dirt, etc.
- Do not pull the seal over sharp edges, threads, or keyways during installation; cover with an installation sleeve if necessary
- Oil or grease the seal, piston rod, and cylinder tube before installation
- Heating the seal in oil at 80°C to 100°C makes the seal material more elastic and easier to install
- Please follow the QR code or hyperlink to the technical manual to obtain further information and instructions.

STORAGE ADVISE

- Storage temperature <25°C
- No direct heat sources
- No direct sunlight
- No condensation in the storage room
- Recommendations based on the revision of ISO 2230 dated 16.09.1992

Pressure [MPa]

92 AU 21100	94 AU 925
32	32

Sliding speed [m/s]

92 AU 21100	94 AU 925
0.6	0.6

FREUDENBERG
SEALING TECHNOLOGIES

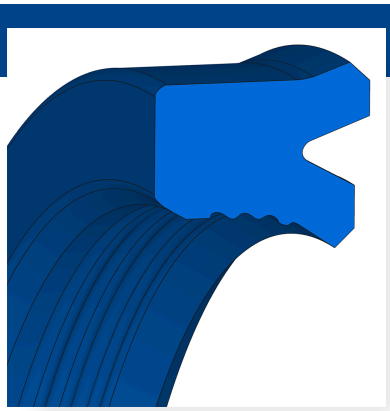

FREUDENBERG

U-Cup LF300

Temperature [°C]

Medium	92 AU 21100	94 AU 925
Hydraulic oils HL, HLP	-40...100	-30...110
HFA fluids	5...50	5...50
HFB fluids	5...50	5...50
HFC fluids	-40...40	-30...40
HFD fluids		
Water	5...40	5...40
HETG (rapeseed oil)	40...60	-30...60
HEES (synthetic esters)	-40...80	-30...60
HEPG (polyglycols)	-40...40	-30...40
Mineral greases	-40...100	-30...110

The values given are based on a limited number of tests on standard test specimens (2 mm sample plates) from laboratory production. The data determined from finished parts may deviate from the above values depending on the manufacturing process and the part geometry.

The information provided herein is based on laboratory tests and on data sources deemed reliable. It constitutes general, non-binding guideline values and does not represent any guarantee of specific properties or suitability for a particular purpose. The suitability of a product for a specific application depends on the actual operating conditions and a variety of factors. Full testing and performance evaluation of the final product are the responsibility of the user. Freudenberg FST GmbH | www.fst.com

FREUDENBERG
SEALING TECHNOLOGIES