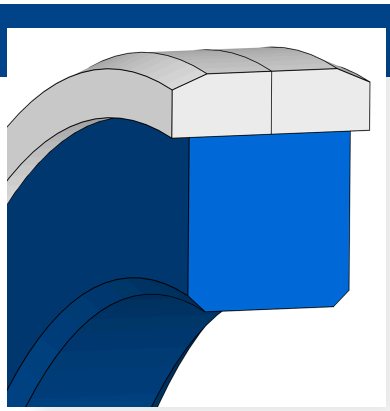

FREUDENBERG

Compact seal HDP330

DESCRIPTION

- Sliding ring with step cut
- Symmetrical
- Double-acting
- Two-piece
- Profile ring as sealing and preloaded element

FUNCTION

- For installation spaces in accordance with DIN ISO 7425/1, among others
- Sealing of pistons
- For pressure load from both sides

APPLICATIONS

- Earthmoving equipment
- Heavy-duty applications
- Agricultural machinery
- Cylinders with drawn tubes

PRODUCT ADVANTAGES

- Dynamic and static tightness similar to PTFE piston seals
- Good dynamic sealing effect
- High extrusion reliability
- Market-leading, proprietary design with the widest range of applications in all industries and for a variety of requirements
- High resistance to torsion in the installation space
- Very good static and dynamic sealing effect
- Highest quality, durability and safety
- Tolerance of higher surface roughness
- Best results in total cost of ownership
- Very high abrasion resistance

CONFORMITY AND CERTIFICATES

- Please consult the material data sheet valid for the respective material for current information on approvals and certificates, as this information depends on the compound and cannot be listed exhaustively here.

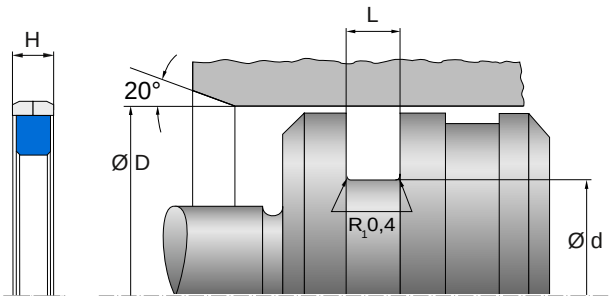

FREUDENBERG
SEALING TECHNOLOGIES

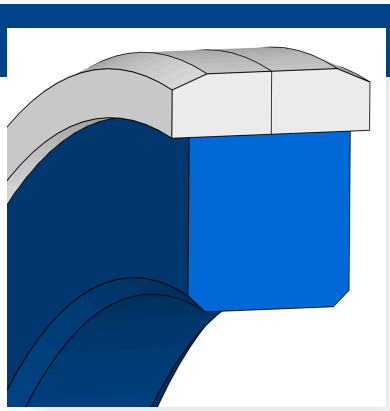

FREUDENBERG

Compact seal HDP330

DESIGN GUIDELINE

- Sharp edges deburred or chamfered or rounded
- To avoid damage, cylinder tubes and piston rods must be chamfered, surface finish Rt=4m
- Please follow the QR code or hyperlink to the technical manual to obtain further information and instructions.

INSTALLATION GUIDELINE

- No machining residues, chips, dirt, etc.
- Do not pull the seal over sharp edges, threads, or keyways during installation; cover with an installation sleeve if necessary
- Oil or grease the seal, piston rod, and cylinder tube before installation
- Please follow the QR code or hyperlink to the technical manual to obtain further information and instructions.

STORAGE ADVISE

- Storage temperature <25°C
- No direct heat sources
- No direct sunlight
- No condensation in the storage room
- No exposure to ozone or ionizing radiation
- Recommendations based on the revision of ISO 2230 dated 16.09.1992

Pressure [MPa]

PA 4112
60

Sliding speed [m/s]

PA 4112
0.8

FREUDENBERG
SEALING TECHNOLOGIES

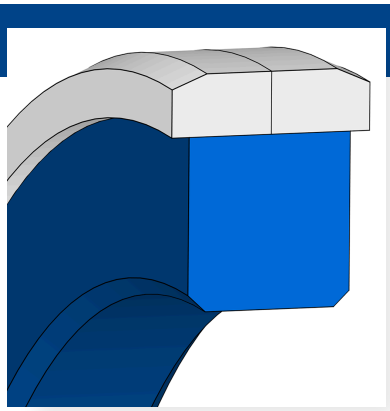

FREUDENBERG

Compact seal HDP330

Temperature [°C]

Medium	PA 4112
Hydraulic oils HL, HLP	-30...100
HFA fluids	5...55
HFB fluids	5...55
HFC fluids	-30...60
HFD fluids	
Water	
HETG (rapeseed oil)	-30...60
HEES (synthetic esters)	-30...80
HEPG (polyglycols)	-30...80
Mineral greases	-30...100

The values given are based on a limited number of tests on standard test specimens (2 mm sample plates) from laboratory production. The data determined from finished parts may deviate from the above values depending on the manufacturing process and the part geometry.

The information provided herein is based on laboratory tests and on data sources deemed reliable. It constitutes general, non-binding guideline values and does not represent any guarantee of specific properties or suitability for a particular purpose. The suitability of a product for a specific application depends on the actual operating conditions and a variety of factors. Full testing and performance evaluation of the final product are the responsibility of the user. Freudenberg FST GmbH | www.fst.com

FREUDENBERG
SEALING TECHNOLOGIES